NAI-CHIEN HUANG
Research Associate,
Stanford University,
Division of Engineering Mechanics,
Stanford, Calif.

Unsymmetrical Buckling of Thin Shallow Spherical Shells[1]

The axisymmetrical snapping of clamped shallow spherical shells has been studied by many authors. There is found to be a discrepancy between the experimental observation of the buckling pressure and their theoretical prediction. In this paper, a study is made of the buckling pressure based on the initiation of unsymmetrical deflection. An eigenvalue problem is formulated and the buckling pressures for shells of a large range of geometrical parameters are obtained numerically. The present work reduces the gap between experiment and theory.

This paper is concerned with the theoretical study of buckling of clamped shallow spherical shells under uniform external pressure, Fig. 1. For sufficiently large deflection, deformations of such shells are not proportional to the applied pressure. The shell deforms axisymmetrically under sufficiently low pressure and, if we assume that the deflection remains axisymmetrical, the pressure-deflection relation may be represented by a curve such as OAB in Fig. 2. At the maximum pressure q_{cr}, the shell tends to jump from A to B, so q_{cr} is the buckling pressure for axisymmetrical snapping. The problem of axisymmetrical snapping has been solved by different numerical methods in references [1–4][2] and the results agree with each other and are represented by the curve in Fig. 3. As shown in Fig. 3, the buckling pressures obtained in such a manner are too high as compared with experimental results obtained in [5–6]. Initial imperfections of the shell and unsymmetrical buckling are presumed to be the sources of this discrepancy between axisymmetrical buckling theory and experiment. Unsymmetrical deformation could conceivably start to develop at point C in Fig. 2. After unsymmetrical deformation has been superimposed, the pressure-deflection curve might be represented by a branch CD or CE at C as shown. The pressure at C is defined as the critical pressure for unsymmetrical buckling. Grigolyuk [7] applied the Galerkin method to solve the problem of unsymmetrical buckling, but no numerical results were given in his work. Gjelsvik and Bodner [8] and Parmerter and Fung [9] worked on this problem by the energy method and numerical calculations were carried out only for a particular unsymmetrical buckling mode. Weinitschke [10] used a power-series method to solve this problem and obtained extensive numerical results. The buckling pressures obtained in his work and in this paper are in serious disagreement with each other.

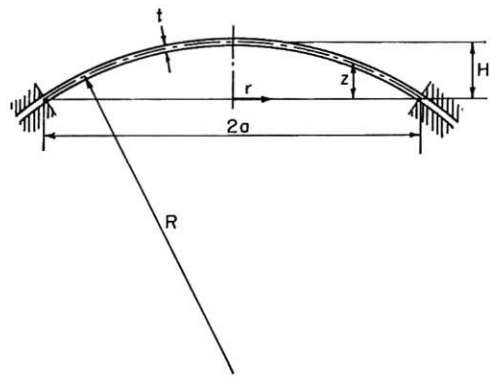

Fig. 1 Geometry of clamped shallow spherical shells

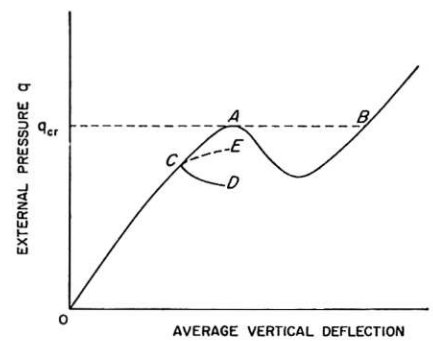

Fig. 2 Pressure-deflection curve of clamped shallow spherical shells

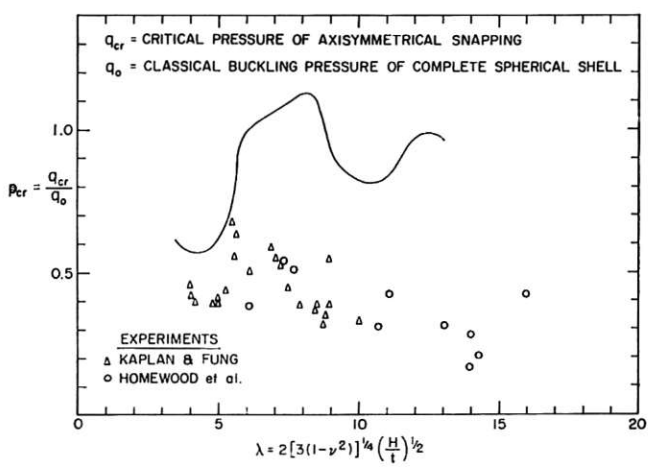

Fig. 3 Calculated critical pressures for axisymmetrical snapping and experimental results

Basic Equations of Shallow Spherical Shells

A shell is called "thin" if the ratio of its thickness to the radius of curvature of its middle surface is much less than unity; and a spherical shell is called "shallow" if the ratio of its rise at the center to the base diameter is less than, say, 1/8. The middle surface of a shallow spherical shell can be represented by the

[1] This work was sponsored by the Office of Naval Research under Contract Nonr 1866(02) with Harvard University.

[2] Numbers in brackets designate References at end of paper.

Presented at the Summer Conference of the Applied Mechanics Division, Boulder, Colo., June 9–11, 1964, of The American Society of Mechanical Engineers.

Discussion of this paper should be addressed to the Editorial Department, ASME, United Engineering Center, 345 East 47th Street, New York, N. Y. 10017, and will be accepted until October 10, 1964. Discussion received after the closing date will be returned. Manuscript received by ASME Applied Mechanics Division, June 27, 1963. Paper No. 64—APM-11.

Copyright © 1964 by ASME

Downloaded From: http://appliedmechanics.asmedigitalcollection.asme.org/ on 01/28/2016 Terms of Use: http://www.asme.org/about-asme/terms-of-use

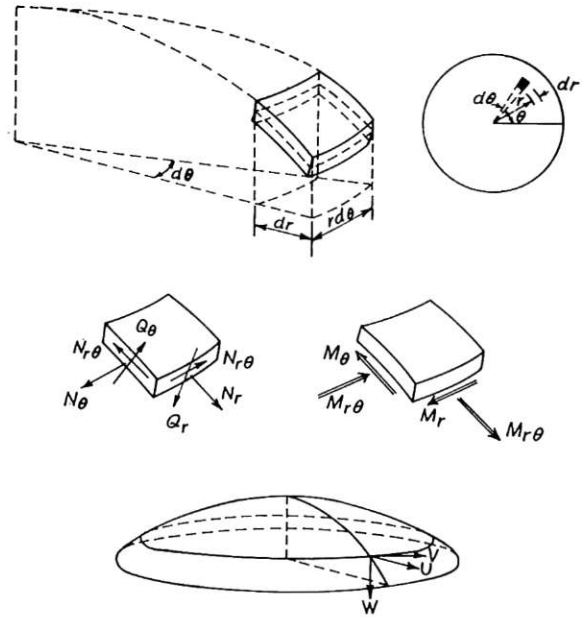

Fig. 4 Stress resultants, moments, and displacements in shells

paraboloid

$$z = H\left[1 - \left(\frac{r}{a}\right)^2\right] \tag{1}$$

where H is the rise of the middle surface at the center and a is the base radius, as shown in Fig. 1. The radius of curvature of the shell is

$$R = \frac{a^2}{2H} \tag{2}$$

The stress resultants and bending moments per unit length of the shell are shown in Fig. 4, where N_r, N_θ, and $N_{r\theta}$ are membrane forces, respectively; Q_r and Q_θ are transverse shears; and M_r, M_θ, and $M_{r\theta}$ are meridional, circumferential and twisting moments, respectively. Let U, V, and W be the horizontal radial, horizontal tangential, and vertical components of displacement, respectively, Fig. 4, and let q be the external pressure which can be considered to be vertical.

In the following equations, we use the notations

$$(\ )' \equiv \frac{\partial}{\partial r}(\ ) \quad \text{and} \quad (\dot{\ }) \equiv \frac{\partial}{\partial \theta}(\ )$$

Equilibrium of moments requires

$$(rM_r)' + \dot{M}_{r\theta} - M_\theta - rQ_r = 0 \tag{3}$$

$$(rM_{r\theta})' + \dot{M}_\theta + M_{r\theta} - rQ_\theta = 0 \tag{4}$$

Equilibrium of stress resultants requires

$$(rN_r)' + \dot{N}_{r\theta} - N_\theta = 0 \tag{5}$$

$$(rN_{r\theta})' + \dot{N}_\theta + N_{r\theta} = 0 \tag{6}$$

$$[rN_r(W - z)' + N_{r\theta}(\overline{W - z}^{\cdot}) + rQ_r]' + \left[\overline{\frac{1}{r} N_\theta(\overline{W - z}^{\cdot}) + N_{r\theta}(W - z)' + Q_\theta}^{\cdot}\right] + rq = 0 \tag{7}$$

Note that nonlinearity has been introduced in equation (7) by considering the influence of W.

The stress-strain relations are

$$\epsilon_r = \frac{1}{tE}(N_r - \nu N_\theta) \tag{8}$$

$$\epsilon_\theta = \frac{1}{tE}(N_\theta - \nu N_r) \tag{9}$$

$$\gamma_{r\theta} = \frac{2(1 + \nu)}{tE} N_{r\theta} \tag{10}$$

$$M_r = D(\kappa_r + \nu\kappa_\theta) \tag{11}$$

$$M_\theta = D(\kappa_\theta + \nu\kappa_r) \tag{12}$$

$$M_{r\theta} = (1 - \nu)D\kappa_{r\theta} \tag{13}$$

where E and ν are the elastic modulus and Poisson's ratio, respectively; t stands for the thickness of the shell, and

$$D = \frac{Et^3}{12(1 - \nu^2)}.$$

The strain-displacement relations are also nonlinear

$$\epsilon_r = U' - z'W' + \tfrac{1}{2}(W')^2 \tag{14}$$

$$\epsilon_\theta = \frac{1}{r}U + \frac{1}{r}\dot{V} - \frac{1}{r^2}\dot{z}\dot{W} + \frac{1}{2}\left(\frac{1}{r}\dot{W}\right)^2 \tag{15}$$

$$\gamma_{r\theta} = \frac{1}{r}\dot{U} - \frac{1}{r}V + V' - \frac{1}{r}\dot{z}W' - \frac{1}{r}z'\dot{W} + \frac{1}{r}\dot{W}W' \tag{16}$$

$$\kappa_r = -W'' \tag{17}$$

$$\kappa_\theta = -\frac{1}{r^2}\ddot{W} - \frac{1}{r}W' \tag{18}$$

$$\kappa_{r\theta} = -\left(\frac{1}{r}\dot{W}\right)' \tag{19}$$

Equations (5) and (6) can be satisfied by setting

$$N_r = \frac{1}{r}F' + \frac{1}{r^2}\ddot{F} \tag{20}$$

$$N_\theta = F'' \tag{21}$$

$$N_{r\theta} = -\left(\frac{1}{r}\dot{F}\right)' \tag{22}$$

where F is a stress function.

Eliminating the transverse shears Q_r and Q_θ from equations (3), (4), and (7), we have

$$[(rM_r)' + \dot{M}_{r\theta} - M_\theta]' + \frac{1}{r}\overline{[(rM_{r\theta})' + \dot{M}_\theta + M_{r\theta}]}^{\cdot} + rN_r(W - z)'' + N_\theta\left[\frac{1}{r}\overline{(W - z)}^{\cdot\cdot} + (W - z)'\right] + 2N_{r\theta}\left[\overline{(W - z)}^{\cdot}{}' - \frac{1}{r}\overline{(W - z)}^{\cdot}\right] + qr = 0 \tag{23}$$

Then the equation of equilibrium obtained by direct substitution is

$$D\nabla^2\nabla^2 W = \left(\frac{1}{r}F' + \frac{1}{r^2}\ddot{F}\right)(W - z)'' + \frac{1}{r^2}F''\overline{(W - z)}^{\cdot\cdot} + \frac{1}{r}F''(W - z)' + 2\left(\frac{1}{r}\dot{F}' - \frac{1}{r^2}\dot{F}\right)\left(\frac{1}{r}\dot{z}' - \frac{1}{r}\dot{W}' - \frac{1}{r^2}\dot{z} + \frac{1}{r^2}\dot{W}\right) + q \tag{24}$$

where

$$\nabla^2(\ ) \equiv (\ )'' + \frac{1}{r}(\ )' + \frac{1}{r^2}\overline{(\ )}^{\cdot\cdot}$$

Downloaded From: http://appliedmechanics.asmedigitalcollection.asme.org/ on 01/28/2016 Terms of Use: http://www.asme.org/about-asme/terms-of-use

Using equations (8)–(10) and (20)–(22), we can show that

$$\frac{1}{r}(r\epsilon_\theta)'' + \frac{1}{r}\epsilon_r' - \frac{1}{r^2}(r\dot{\gamma}_{r\theta})' + \frac{1}{r^2}\ddot{\epsilon}_r = \frac{1}{Et}\nabla^2(N_r + N_\theta) = \frac{1}{Et}\nabla^4 F \quad (25)$$

Substituting equations (14)–(16) into the left-hand side, we get another fundamental equation involving F and W

$$\nabla^4 F = Et\left\{-2\left(\frac{1}{r}\dot{z}' - \frac{1}{r^2}\dot{z}\right)\left(\frac{1}{r}\dot{W}' - \frac{1}{r^2}\dot{W}\right) + z''\left(\frac{1}{r}W' + \frac{1}{r^2}\ddot{W}\right) + W''\left(\frac{1}{r}z' + \frac{1}{r^2}\ddot{z}\right) + \left(\frac{1}{r}\dot{W}' - \frac{1}{r^2}\dot{W}\right)^2 - W''\left(\frac{1}{r}W' + \frac{1}{r^2}\ddot{W}\right)\right\} \quad (26)$$

which is the compatibility equation of shallow spherical shells.

Substituting equation (1) into equations (24) and (26), we get Marguerre's nonlinear differential equations [11] in polar coordinates for shallow spherical shells under uniform pressure

$$D\nabla^4 W = \frac{1}{R}\nabla^2 F + \left(\frac{1}{r}F' + \frac{1}{r^2}\ddot{F}\right)W'' + \left(\frac{1}{r}W' + \frac{1}{r^2}\ddot{W}\right)F'' - 2\left(\frac{1}{r}\dot{F}' - \frac{1}{r^2}\dot{F}\right)\left(\frac{1}{r}\dot{W}' - \frac{1}{r^2}\dot{W}\right) + q \quad (27)$$

$$\nabla^4 F = Et\left[-\frac{1}{R}\nabla^2 W + \left(\frac{1}{r}\dot{W}' - \frac{1}{r^2}\dot{W}\right)^2 - \left(\frac{1}{r}W' + \frac{1}{r^2}\ddot{W}\right)W''\right] \quad (28)$$

Let us introduce the following nondimensional quantities:

$$\lambda = 2[3(1-\nu^2)]^{1/4}(H/t)^{1/2}$$

$$x = \frac{\lambda}{a}r$$

$$w = \frac{\lambda^2}{2H}W$$

$$\Psi = \frac{\lambda^4}{4EH^2t}F$$

$$p = \frac{q}{q_0}$$

where

$$q_0 = \frac{32EH^3t}{\lambda^2 a^4}$$

is the classical buckling pressure of a complete spherical shell of the same radius of curvature and thickness. Then the nondimensional forms of equations (27) and (28) are

$$\nabla^4 w = \nabla^2\Psi + \left(\frac{1}{x}\Psi' + \frac{1}{x^2}\ddot{\Psi}\right)w'' + \left(\frac{1}{x}w' + \frac{1}{x^2}\ddot{w}\right)\Psi'' - 2\left(\frac{1}{x}\dot{\Psi}' - \frac{1}{x^2}\dot{\Psi}\right)\left(\frac{1}{x}\dot{w}' + \frac{1}{x^2}\dot{w}\right) + 4p \quad (29)$$

$$\nabla^4\Psi = -\nabla^2 w + \left(\frac{1}{x}\dot{w}' - \frac{1}{x^2}\dot{w}\right)^2 - \left(\frac{1}{x}w' + \frac{1}{x^2}\ddot{w}\right)w'' \quad (30)$$

where

$$(\ )' \equiv \frac{\partial}{\partial x}(\ ) \quad \text{and} \quad \nabla^2(\ ) \equiv \left(\frac{\partial^2}{\partial x^2} + \frac{1}{x}\frac{\partial}{\partial x} + \frac{1}{x^2}\frac{\partial^2}{\partial\theta^2}\right)(\ )$$

The edge of the shell is completely clamped; therefore, on the boundary $r = a$, we have

$$W = 0 \quad (31)$$

$$W' = 0 \quad (32)$$

$$U = 0 \quad (33)$$

$$V = 0 \quad (34)$$

From the last two boundary conditions, we can show by the strain-displacement relations that

$$\epsilon_\theta = 0 \quad (35)$$

$$a\epsilon_\theta' - \epsilon_r - \dot{\gamma}_{r\theta} = 0 \quad (36)$$

on the boundary $r = a$.

Expressed in terms of the stress function, these equations become

$$F'' - \frac{\nu}{a}F' - \frac{\nu}{a^2}\ddot{F} = 0 \quad (37)$$

$$a\left(F'' - \frac{\nu}{r}F' - \frac{\nu}{r^2}\ddot{F}\right)' - \frac{1}{a}F' - \frac{1}{a^2}\ddot{F} + \nu F'' + 2(1+\nu)\left(\frac{1}{r}\ddot{F}\right)' = 0 \quad (38)$$

on $r = a$.

The nondimensional forms of equations (31), (32), (33), and (34) are

$$w = 0 \quad (39)$$

$$w' = 0 \quad (40)$$

$$\Psi'' - \frac{\nu}{\lambda}\Psi' - \frac{\nu}{\lambda^2}\ddot{\Psi} = 0 \quad (41)$$

$$\lambda\left(\Psi'' - \frac{\nu}{x}\Psi' - \frac{\nu}{x^2}\ddot{\Psi}\right)' - \frac{1}{\lambda}\Psi' - \frac{1}{\lambda^2}\ddot{\Psi} + \nu\Psi'' + 2(1+\nu)\left(\frac{1}{x}\ddot{\Psi}\right)' = 0 \quad (42)$$

on $x = \lambda$.

In addition, at the center of the shell, w and Ψ must fulfill the requirement of finite stresses.

Governing Equations for Buckling of Clamped Shallow Spherical Shells

As mentioned before, the shell necessarily deforms axisymmetrically only under sufficiently low pressure. The pressure might reach a critical limit (point C in Fig. 2) such that the shell bifurcates from an axisymmetrical deformation path to one of unsymmetrical deformation.

Just after bifurcation, the functions w and Ψ can be written as

$$w = \omega^*(x) + \omega(x, \theta) \quad (43)$$

$$\Psi = \psi^*(x) + \psi(x, \theta) \quad (44)$$

where $\omega^*(x)$ and $\psi^*(x)$ are the nondimensional vertical deflection and the nondimensional stress function, respectively, just before buckling and hence are axisymmetrical; $\omega(x, \theta)$ and $\psi(x, \theta)$ are due to unsymmetrical buckling and these are considered to be infinitesimally small at the beginning of unsymmetrical buckling. From equations (29) and (30), we have

$$\nabla^4\omega^* = \nabla^2\psi^* + \frac{1}{x}\psi^{*\prime}\omega^{*\prime\prime} + \frac{1}{x}\psi^{*\prime\prime}\omega^{*\prime} + 4p \quad (45)$$

$$\nabla^4\psi^* = -\nabla^2\omega^* - \frac{1}{x}\omega^{*\prime}\omega^{*\prime\prime} \quad (46)$$

Put $\theta^* = -\omega^{*\prime}$ and $\Phi^* = \psi^{*\prime}$, equations (45) and (46) can be written, after one integration, as

Downloaded From: http://appliedmechanics.asmedigitalcollection.asme.org/ on 01/28/2016 Terms of Use: http://www.asme.org/about-asme/terms-of-use

$$(x\theta^{*\prime}) - \frac{\theta^*}{x} + x\Phi^* = -2px^2 + \theta^*\Phi^* \tag{47}$$

$$(x\Phi^{*\prime})' - \frac{\Phi^*}{x} - x\theta^* = -\tfrac{1}{2}\theta^{*2} \tag{48}$$

Also, the boundary conditions can be reduced to

$$\theta^*(\lambda) = 0 \tag{49}$$

$$\lambda\Phi^{*\prime}(\lambda) - \nu\Phi^*(\lambda) = 0 \tag{50}$$

These are the governing equations of the symmetrical problem which have been solved numerically in [1–4].

Substituting equations (43) and (44) into equations (29) and (30) and using equations (45) and (46), we obtain

$$\nabla^4\omega = \nabla^2\psi - \left(\frac{1}{x}\psi' + \frac{1}{x^2}\ddot{\psi}\right)\theta^{*\prime} + \frac{1}{x}\omega''\Phi^* - \frac{1}{x}\psi''\theta^{*\prime} + \left(\frac{1}{x}\omega' + \frac{1}{x^2}\ddot{\omega}\right)\Phi^{*\prime} \tag{51}$$

$$\nabla^4\psi = -\nabla^2\omega + \left(\frac{1}{x}\omega' + \frac{1}{x^2}\ddot{\omega}\right)\theta^{*\prime} + \frac{1}{x}\omega''\theta^* \tag{52}$$

where only the linear terms in ω and ψ have been retained. These are two linear differential equations for the functions ω and ψ. Hence our problem has been reduced to an eigenvalue problem where the eigenvalue p is implicit and involved in the solution θ^* and Φ^* of the nonlinear problem as defined by equations (47)–(50).

Let

$$\omega(x, \theta) = \sum_{n=0}^{\infty} \omega_n(x) \cos n\theta \tag{53}$$

$$\psi(x, \theta) = \sum_{n=0}^{\infty} \psi_n(x) \cos n\theta \tag{54}$$

$$L_n(\ ) = \left(\frac{d^2}{dx^2} + \frac{1}{x}\frac{d}{dx} - \frac{n^2}{x^2}\right)(\ ); \quad L_n^2(\ ) = L_nL_n(\ )$$

Substituting equations (53) and (54) into (51) and (52), we have, for each n,

$$L_n^2\omega_n = L_n\psi_n - \left(\frac{1}{x}\psi_n' - \frac{n^2}{x^2}\psi_n\right)\theta^{*\prime} + \frac{1}{x}\omega_n''\Phi^* - \frac{1}{x}\psi_n''\theta^* + \left(\frac{1}{x}\omega_n' - \frac{n^2}{x^2}\omega_n\right)\Phi^{*\prime} \tag{55}$$

$$L_n^2\psi_n = -L_n\omega_n + \left(\frac{1}{x}\omega_n' - \frac{n^2}{x^2}\omega_n\right)\theta^{*\prime} + \frac{1}{x}\omega_n''\theta^* \tag{56}$$

The boundary conditions can be derived from equations (39)–(42). These are

$$\omega_n(\lambda) = 0 \tag{57}$$

$$\omega_n'(\lambda) = 0 \tag{58}$$

$$\psi_n''(\lambda) - \frac{\nu}{\lambda}\psi_n'(\lambda) + \frac{n^2\nu}{\lambda^2}\psi_n(\lambda) = 0 \tag{59}$$

$$\lambda\psi_n'''(\lambda) - \frac{1}{\lambda}[1 - \nu + (2 + \nu)n^2]\psi_n'(\lambda) + \frac{3n^3}{\lambda^2}\psi_n(\lambda) = 0 \tag{60}$$

Equations (55)–(60) are the governing differential equations and the boundary conditions of the problem of unsymmetrical buckling of clamped shallow spherical shells. Existence of a solution for any integer n at a pressure less than the critical pressure of axisymmetrical snapping implies existence of a critical pressure for unsymmetrical buckling.

Some Preliminary Studies

Modified Problems

Before the main problem was treated, it was considered advisable to study some problems of unsymmetrical buckling of shells with modified boundary conditions for which the solutions can be obtained analytically. The purpose of this study is to find whether unsymmetrical buckling rather than axisymmetrical snapping would control in these modified problems. The answers for the critical pressure for unsymmetrical buckling obtained here can be also used to check the accuracy of the numerical procedures for the main problem.

In the first modified problem the edge of the shell is supported by rollers which can slide along a conical wall without changing the slope along the edge of the shell as shown in Fig. 5. In the second modified problem the edge condition is the same as that in the first modified problem except that the edge is imagined to be suddenly clamped just before buckling occurs. In both modified problems the shell contracts uniformly before buckling and, therefore, $\theta^* = 0$ and $\Phi^* = -2px$.

The critical pressures for these modified problems are calculated for $n = 0, 1, 2$, and 3 in Appendix 1 and are plotted against λ in Figs. 5 and 6, where n is the number of waves along the circumferential direction in the buckling mode. In both modified problems it is found that unsymmetrical buckling ($n \neq 0$) dominates for some values of λ. These calculated critical pressures are higher than the classical buckling pressure of a complete

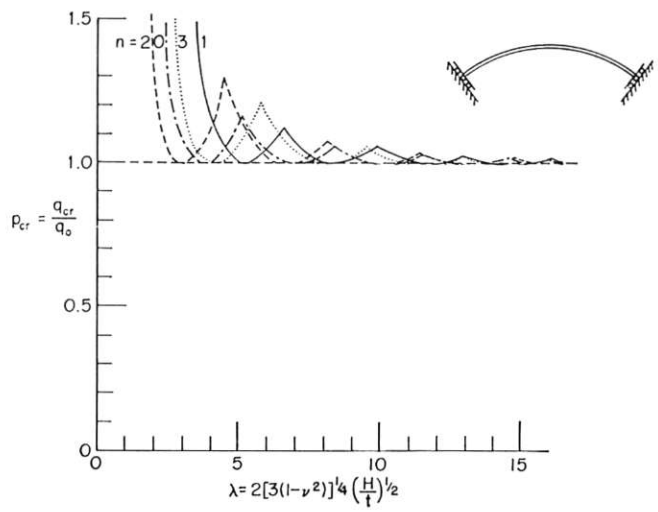

Fig. 5 Buckling pressures in the first modified problem

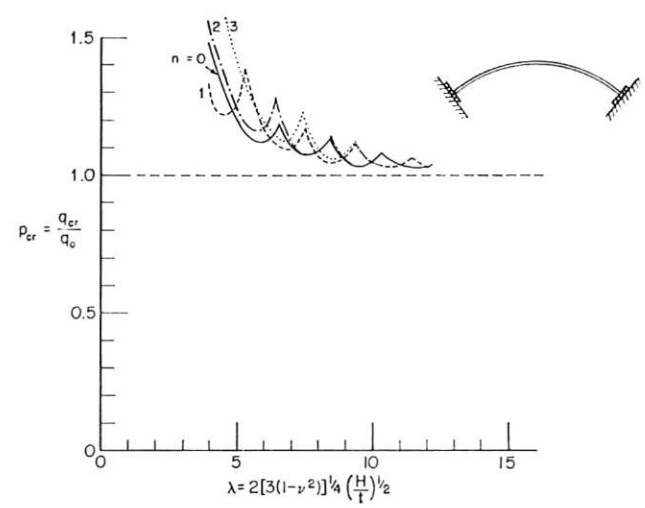

Fig. 6 Buckling pressures in the second modified problem

Downloaded From: http://appliedmechanics.asmedigitalcollection.asme.org/ on 01/28/2016 Terms of Use: http://www.asme.org/about-asme/terms-of-use

Table 1 Buckling-pressure calculated by variational principle for $\lambda = 6$

n	p_{cr} calculated by variational principle
1	>0.85
2	0.770
3	0.751
4	0.850

spherical shell. In the first modified problem the calculated critical pressures meet the classical buckling pressure periodically at certain values of λ, and in the second modified problem the calculated critical pressure approaches the classical buckling pressure asymptotically when λ approaches infinity. In both problems the results are not realistic because of initial imperfections.

Approximation by Variational Principle

A variational principle is developed in Appendix 2 for a preliminary study of the critical pressure of unsymmetrical buckling of clamped shallow spherical shells. The boundary conditions (57) and (58) of the main problem were specified in the application of this principle. The differential equations (55) and (56) are the Euler's equations and the boundary conditions (59) and (60) are the natural boundary conditions of this variational principle. A Rayleigh-Ritz method is used in conjunction with the variational principle in Appendix 2 and numerical results have been obtained for $\lambda = 6$ as shown in Table 1. These critical pressures for unsymmetrical buckling are lower than the critical pressure for axisymmetrical snapping, and this certainly tends to confirm the suspicion that unsymmetrical buckling does occur for clamped shallow spherical shells. However, the numerical results obtained by this variational principle are not necessarily either upper bounds or lower bounds to the exact critical pressure for unsymmetrical buckling.

Numerical Solution

Difference Equations

The most popular practical method to solve differential equations is to reduce them to difference equations by confining the range of the independent variables to a network of mesh points. In this problem we define

$$x = jh \qquad j = 0, 1, \ldots, N = \lambda/h$$

where h is the mesh size.

Let

$$\omega_j = \omega_n(jh); \quad \psi_j = \psi_n(jh); \quad \theta_j^* = \theta^*(jh) \quad \text{and} \quad \Phi_j^* = \Phi^*(jh)$$

Using

$$u_j = \omega_j'' \tag{61}$$

$$v_j = \psi_j'' \tag{62}$$

The differential equations (55) and (56) at $j = 1, 2, \ldots, N$ can be written as

$$\begin{aligned} u_j'' + \frac{2}{x} u_j' - \frac{1+2n^2}{x^2} u_j + \frac{1+2n^2}{x^3} \omega_j' - \frac{4n^2 - n^4}{x^4} \omega_j \\ = v_j + \frac{1}{x} \psi_j' - \frac{n^2}{x^2} \psi_j - \left(\frac{1}{x} \psi_j' - \frac{n^2}{x^2} \psi_j\right) \theta_j^{*\prime} \\ + \frac{1}{x} u_j \Phi_j^* - \frac{1}{x} v_j \theta_j^* + \left(\frac{1}{x} \omega_j' - \frac{n^2}{x^2} \omega_j\right) \Phi_j^{*\prime} \\ j = 1, 2, \ldots, N \end{aligned} \tag{63}$$

$$\begin{aligned} v_j'' + \frac{2}{x} v_j' - \frac{1+2n^2}{x^2} v_j + \frac{1+2n^2}{x^3} \psi_j' - \frac{4n^2 - n^4}{x^4} \psi_j \\ = -u_j - \frac{1}{x} \omega_j' + \frac{n^2}{x^2} \omega_j + \left(\frac{1}{x} \omega_j' - \frac{n^2}{x^2} \omega_j\right) \theta_j^{*\prime} \\ + \frac{1}{x} u_j \theta_j^* \qquad j = 1, 2, \ldots, N \end{aligned} \tag{64}$$

The boundary conditions (57)–(60) can be written as

$$\omega_N = 0 \tag{65}$$

$$\omega_N' = 0 \tag{66}$$

$$v_N - \frac{\nu}{\lambda} \psi_N' + \frac{n^2 \nu}{\lambda^2} \psi_N = 0 \tag{67}$$

$$\lambda v_N' - \frac{1}{\lambda} [1 - \nu + (2 + \nu) n^2] \psi_N' + \frac{3n^2}{\lambda^2} \psi_N = 0 \tag{68}$$

We shall use the following finite-difference approximations for the first and second derivatives:

$$f_j' = \frac{1}{2h} (-f_{j-1} + f_{j+1}) \tag{69}$$

$$f_j'' = \frac{1}{h^2} (f_{j-1} - 2f_j + f_{j+1}) \tag{70}$$

The error of these approximations are $0(h^2)$. Equations (61)–(64) can be written as

$$A_j y_{j+1} + B_j y_j + C_j y_{j-1} = 0 \qquad j = 1, 2, \ldots, N \tag{71}$$

where one fictitious station $j = N + 1$ has been added off the edge of the shell for convenience. Equations (65)–(68) can be written as

$$G y_{N+1} + K y_N - G y_{N-1} = 0 \tag{72}$$

where

$$y_j = \begin{bmatrix} \omega_j \\ \psi_j \\ u_j \\ v_j \end{bmatrix} \tag{73}$$

$$A_j = \begin{bmatrix} -1 & 0 & 0 & 0 \\ 0 & -1 & 0 & 0 \\ \dfrac{1+2n^2}{2j^3} - \dfrac{h^2}{2j} \Phi_j^{*\prime} & -\dfrac{h^2}{2j} (1 - \theta_j^{*\prime}) & h^2 \left(1 + \dfrac{1}{j}\right) & 0 \\ \dfrac{h^2}{2j} (1 - \theta_j^{*\prime}) & \dfrac{1+2n^2}{2j^3} & 0 & h^2 \left(1 + \dfrac{1}{j}\right) \end{bmatrix} \tag{74}$$

$$B_j = \begin{bmatrix} 2 & 0 & h^2 & 0 \\ 0 & 2 & 0 & h^2 \\ -\dfrac{4n^2 - n^4}{j^4} + \dfrac{h^2 n^2}{j^2} \Phi_j^{*\prime} & \dfrac{h^2 n^2}{j^2} (1 - \theta_j^{*\prime}) & -h^2 \left(2 + \dfrac{1+2n^2}{{}^2 j} + \dfrac{1}{j} \Phi_j^*\right) & -h^3 \left(h - \dfrac{1}{j} \theta_j^*\right) \\ -\dfrac{h^2 n^2}{j^2} (1 - \theta_j^{*\prime}) & -\dfrac{4n^2 - n^4)}{j^4} & h^3 \left(h - \dfrac{1}{j} \theta_j^*\right) & -h^2 \left(2 + \dfrac{1+2n^2}{j^2}\right) \end{bmatrix} \tag{75}$$

Downloaded From: http://appliedmechanics.asmedigitalcollection.asme.org/ on 01/28/2016 Terms of Use: http://www.asme.org/about-asme/terms-of-use

$$C_j = \begin{bmatrix} -1 & 0 & 0 & 0 \\ 0 & -1 & 0 & 0 \\ -\dfrac{1+2n^2}{2j^3} + \dfrac{h^2}{2j}\Phi_j^{*\prime} & \dfrac{h^2}{2j}(1-\theta_j^{*\prime}) & h^2\left(1-\dfrac{1}{j}\right) & 0 \\ -\dfrac{h^2}{2j}(1-\theta_j^{*\prime}) & -\dfrac{1+2n^2}{2j^3} & 0 & h^2\left(1-\dfrac{1}{j}\right) \end{bmatrix} \quad (76)$$

$$G = \begin{bmatrix} 0 & 0 & 0 & 0 \\ 1 & 0 & 0 & 0 \\ 0 & -\dfrac{\nu}{2h\lambda} & 0 & 0 \\ 0 & -\dfrac{1}{2h\lambda}[1-\nu+(2+\nu)n^2] & 0 & \dfrac{\lambda}{2h} \end{bmatrix} \quad (77)$$

and

$$K = \begin{bmatrix} 1 & 0 & 0 & 0 \\ 0 & 0 & 0 & 0 \\ 0 & \dfrac{n^2\nu}{\lambda^2} & 0 & 1 \\ 0 & \dfrac{3n^2}{\lambda^2} & 0 & 0 \end{bmatrix} \quad (78)$$

From the conditions that all components of stress resultant and moment are bounded at the center of the shell, it can be shown that, near $x = 0$ $\omega_n \sim x^n$ and $\psi_n \sim x^n$. Therefore $C_1 y_0 = 0$, and the first equation of (71) will simply be

$$A_1 y_2 + B_1 y_1 = 0 \quad (79)$$

Determination of Buckling Pressure

Let

$$y_j = Q_j y_{j+1} \quad (80)$$

then

$$y_{j-1} = Q_{j-1} y_j \quad (81)$$

Substituting equation (81) into equation (71), we get

$$y_j = -(B_j + C_j Q_{j-1})^{-1} A_j y_{j+1}$$

or

$$Q_j = -(B_j + C_j Q_{j-1})^{-1} A_j \quad (82)$$

From equation (79)

$$Q_1 = -B_1^{-1} A_1 \quad (83)$$

which also can be obtained from equation (82) by setting

$$Q_0 = 0 \quad (84)$$

Equation (82) is a recurrence formula by which all Q can be evaluated.

Substituting equation (80) into equation (72), we get

$$S y_{N+1} = 0 \quad (85)$$

where

$$S = G(I - Q_{N-1} Q_N) + K Q_N \quad (86)$$

and I is a 4×4 unit matrix. For a nontrivial solution $y_{N+1} \neq 0$

$$|S| = 0 \quad (87)$$

which is the characteristic equation for determination of critical pressures of unsymmetrical buckling.

The case $n = 1$ is a special case where equations (55)–(60) can be satisfied for all p by an exact solution $\omega_1 = 0$ and $\psi_1 = x$. Since the difference equations are exact for linear functions, equations (71) and (72) can be satisfied by

$$y_j = \begin{bmatrix} 0 \\ j \\ 0 \\ 0 \end{bmatrix}$$

Equation (85) can be written as

$$[S] \begin{bmatrix} 0 \\ 1 \\ 0 \\ 0 \end{bmatrix} = 0$$

for $n = 1$ and so all elements in the second column of matrix S vanish. For $n = 1$, equation (56) is reduced to

$$\frac{d}{dx}\left[x^2\psi''' - 3\psi' + \frac{3}{x}\psi + x^2\omega' - x\omega - (x\omega' - \omega)\theta\right] = 0$$

Integrating from $x = 0$ to $x = \lambda$ and using equations (57) and (58), we can obtain equation (60). Thus, for $n = 1$, equation (60) is dependent and can be omitted. We have

$$[\bar{S}] \begin{bmatrix} \omega_{N+1} \\ u_{N+1} \\ v_{N+1} \end{bmatrix} = 0$$

where $\bar{S}$ is the resulting matrix obtained by striking out the second column and the fourth row of the matrix S. For a nontrivial solution,

$$|\bar{S}| = 0 \quad (88)$$

which is the characteristic equation for determination of critical pressures for unsymmetrical buckling for $n = 1$.

Numerical Procedure and Results

The numerical procedure of this problem consists of two parts. The first part is to calculate θ^*, Φ^* and their derivatives for the axisymmetrical deformation before unsymmetrical buckling. We used the iterative method given in [1].[3] The Poisson's ratio ν was taken equal to 1/3 in all calculations, and the interval Δx used was 0.25. The first derivatives of θ^* and Φ^* were calculated by equation (69). The values of Kelvin functions and their first derivatives used were found in [12].

In the second part of the calculation, the elements of matrices A_j, B_j, C_j, G, and K were calculated first for different values of n and Q_j, S, and $|S|$ could be obtained. In general, $|S|$ does not vanish if the trial value of p is not the buckling pressure p_{cr}. The values of $|S|$ were plotted against p. The critical pressure is the lowest root of $|S| = 0$. When $n = 1$, $\bar{S}$ must be calculated instead of S. This procedure continued for different values of n until

[3] The criterion of convergence of the iterative procedure used in this computation is that the final answer for average deflection agrees to four significant figures with the mean of the results of the five previous iterations.

Downloaded From: http://appliedmechanics.asmedigitalcollection.asme.org/ on 01/28/2016 Terms of Use: http://www.asme.org/about-asme/terms-of-use

Table 2 Calculated buckling pressures of clamped shallow spherical shells

n	λ																
	3.5	4	5	5.5	6	7	8	9	10	11	12	13	14	15	16	17	18
0	0.614	0.578	0.629	0.762 – 0.763	0.995	1.068	1.130	0.931 – 0.94	0.822 – 0.83	0.83 – 0.84	0.96 – 0.97	0.96 – 0.97	0.98 – 0.99	0.98 – 0.99	0.92 – 0.93	0.90 – 0.91	0.94 – 0.95
1					0.919	1.023											
2					0.775	0.796	0.893										
3					0.827	0.760	0.774	0.846									
4					0.931	0.812	0.766	0.777	0.814		0.899						
5						0.902	0.813	0.777	0.776	0.800	0.841	0.872	0.900	0.929			
6						1.000	0.887	0.816	0.780	0.776	0.798	0.826	0.850	0.874	0.905		
7							0.973	0.877	0.812	0.782	0.780	0.794	0.814	0.835	0.859	0.879	0.906
8							1.057			0.810	0.790	0.781	0.790	0.807	0.828	0.847	0.861
9											0.815	0.792	0.782	0.790	0.803	0.818	0.838
10											0.853	0.816	0.801	0.785	0.792	0.800	0.818
11											0.896	0.849	0.815	0.797	0.790	0.792	0.802
12											0.942	0.892	0.843	0.814	0.800	0.792	0.793
13												0.928	0.876	0.843	0.818	0.800	0.794
14													0.918	0.873	0.842	0.814	0.803
15													0.951	0.911	0.872	0.837	0.818
16														0.945	0.901	0.864	0.835
17														0.976		0.892	0.860
18																	0.888
19																	0.911

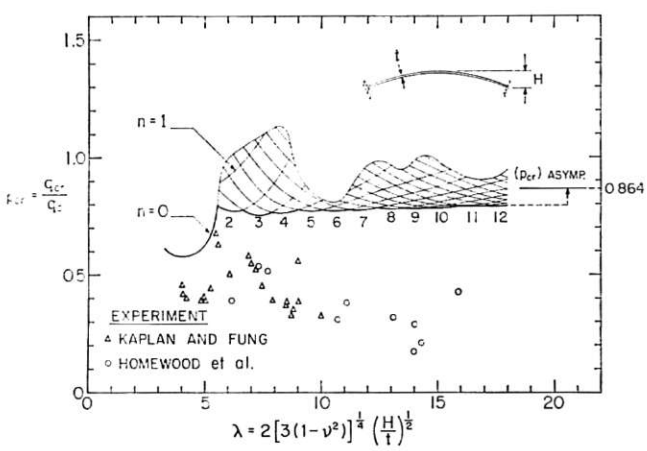

Fig. 7 Calculated buckling pressures of clamped shallow spherical shells and experimental results

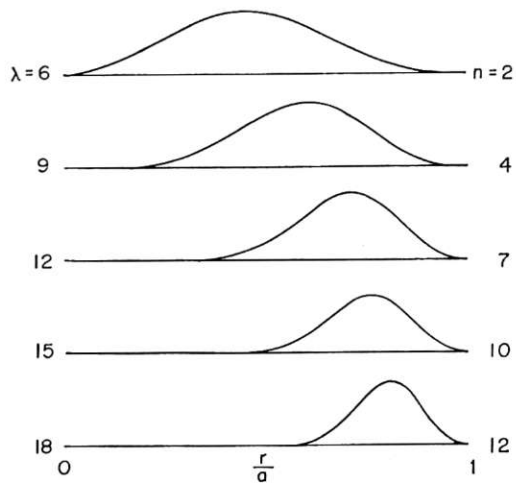

Fig. 8 Buckling modes of clamped shallow spherical shells

axisymmetrical snapping occurred before unsymmetrical buckling appeared.

Two mesh sizes, $h = 0.25$ and $h = 0.125$, were used in the calculation for $\lambda = 6$. Since the mesh size 0.25 was used in the first part of the calculation, in the computation for $h = 0.125$, the values of θ^*, Φ^* and their first derivatives at the intermediate stations were obtained by linear interpolation. The difference of buckling pressures calculated by these two mesh sizes was about 0.1 percent. Hence we use $h = 0.25$ in our calculation.[4]

The validity of this numerical procedure was checked by comparing solutions of the second modified problem in Appendix 1, Fig. 6, with solutions obtained by this numerical method. Computations were carried out for the cases $\lambda = 6$ and $\lambda = 10$ and the maximum error in p_{cr} was 0.4 percent.

All numerical calculations were made on the IBM 7090 digital computer, and the program was written in the FORTRAN language. The critical pressures for different values of λ and n are given in Table 2 and also plotted in Fig. 8. The lowest value of these critical pressures at a given λ is the governing pressure for unsymmetrical buckling. These governing pressures are shown by a heavy line in Fig. 7. Buckling modes were evaluated for these governing pressures and are shown in Fig. 8.

According to the results of the calculation, unsymmetrical buckling ($n \neq 0$) does not occur for $\lambda \leq 5.5$. Unsymmetrical

[4] This choice of mesh size provides a reasonable number of stations within the boundary layer of the buckling mode.

Downloaded From: http://appliedmechanics.asmedigitalcollection.asme.org/ on 01/28/2016 Terms of Use: http://www.asme.org/about-asme/terms-of-use

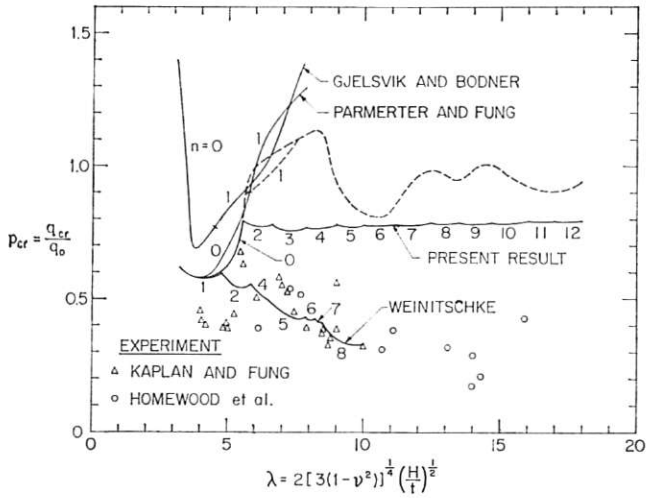

Fig. 9 Comparison of calculated pressures of unsymmetrical buckling with previous results

buckling starts to appear when λ is slightly greater than 5.5. As λ keeps increasing the buckling mode shows more and more waves along the circumferential direction and also shows a distinct boundary layer near the edge of the shell along the radial direction when λ is high. An asymptotic analysis has been done in Appendix 3 where an asymptotic value of the critical pressure for unsymmetrical buckling is found to be 0.864 when λ approaches infinity, and the ratio n/λ is found to approach 0.817.

Discussion

The shell may snap through under the critical pressure for unsymmetrical buckling if the tangent of the branch on the pressure-deflection curve has a negative slope at that critical pressure (as shown by the branch *CD* in Fig. 2). On the other hand, if that branch has a positive slope (as *CE*), deformation of the shell changes from the axisymmetrical type to the unsymmetrical type suddenly under the critical pressure but no snapping appears. The determination of the branch of pressure-deflection curve involves the analysis of the postbuckling behavior of the shell.

In Fig. 9 the results of previous attempts to calculate critical pressures for buckling of shells are plotted for the purpose of comparison with the present results. Gjelsvik and Bodner [8], and Parmerter and Fung [9] calculated the critical pressures based on an approximate solution for the cases $n = 0$ and $n = 1$. The junctions of curves for $n = 0$ and curves for $n = 1$ in Fig. 9 are represented by tick marks. Weinitschke [10] obtained critical pressures for an extensive range of λ and n which seem to be in good agreement with experiments. The buckling pressures obtained in his work are in serious disagreement with the present results. It is noted that, for $n = 1$, the present result is much closer to the results in [8] and [9] than Weinitschke's result.[5] In references [7], [8], and [9] the curves representing critical pressures for $n = 0$ are shown to be tangent to those for $n = 1$ at their junctions. However, this tangency does not appear in the curve of the present work. The present theoretical buckling pressures are still higher than the experimental results. The effects of initial unsymmetrical geometrical imperfections and variation of shell thickness are presumed to be the source of this discrepancy, but the analysis of such a problem is very complicated.

Acknowledgment

The author wishes to acknowledge his deep indebtedness to Prof. B. Budiansky who has given constant encouragement and illuminating advice in the whole course of research. Discussions with Prof. J. L. Sanders have been particularly enlightening.

[5] More recently, in a private communication, G. A. Thurston stated that he found a lower bound to the critical pressure $p_{cr} = 0.753$ for $n = 4$ and $\lambda = 8$, which is close to the present result $p_{cr} = 0.766$ (Table 2).

References

1 B. Budiansky, "Buckling of Clamped Shallow Spherical Shells," *Proceedings of the Symposium on the Theory of Thin Elastic Shells*, Delft, North Holland Publishing Co., Amsterdam, Holland, August, 1959, p. 64.

2 H. Weinitschke, "On the Stability Problem for Shallow Spherical Shells," *Journal of Mathematics and Physics*, vol. 38, January, 1960, p. 209.

3 G. A. Thurston, "A Numerical Solution of the Nonlinear Equations for Axisymmetric Bending of Shallow Spherical Shells," Journal of Applied Mechanics, vol. 28, Trans. ASME, vol. 83, Series E, December, 1961, p. 557.

4 R. R. Archer, "On the Numerical Solution of the Nonlinear Equations for Shells of Revolution," *Journal of Mathematics and Physics*, vol. 40, September, 1962, p. 165.

5 A. Kaplan and Y. C. Fung, "A Nonlinear Theory of Bending and Buckling of Thin Elastic Shallow Spherical Shells," NACA Technical Note 3212, August, 1954.

6 R. H. Homewood, A. C. Brine, and A. E. Johnson, Jr., "Experimental Investigation of the Buckling Instability of Monocoque Shells," *Proceedings of the Society for Experimental Stress Analysis*, vol. 18, 1961, p. 88.

7 E. I. Grigolyuk, "On the Unsymmetrical Snapping of Shells of Revolution," *Proceedings of the Symposium on the Theory of Thin Elastic Shells*, Delft, North Holland Publishing Co., Amsterdam, Holland, August, 1959, p. 112.

8 A. Gjelsvik and S. R. Bodner, "Non-symmetrical Snap Buckling of Spherical Caps," *Journal of the Engineering Mechanics Division*, Proceedings of the American Society of Civil Engineers, vol. 88, No. EM5, October, 1962.

9 R. D. Parmerter and Y. C. Fung, "On the Influence of Nonsymmetrical Modes on the Buckling of Shallow Spherical Shells Under Uniform Pressure," NASA TND-1510, 1962, p. 491.

10 H. J. Weinitschke, "Asymmetric Buckling of Clamped Shallow Spherical Shell," NASA TND-1510, 1962, p. 481.

11 K. Marguerre, "Zur Theorie der gekrümmten Platte grosser Formänderung," *Jahrbuch der 1939 der deutschen Luftfahrtforschung*, p. 413.

12 H. H. Lowell, "Tables of the Bessel-Kelvin Functions Ber, Bei, Ker, Kei, and Their Derivatives for the Argument Range 0(0.01)-107.50," NASA TR-32, 1959.

13 H. J. Weinitschke, "On the Nonlinear Theory of Shallow Spherical Shells," *Journal of the Society for Industrial and Applied Mathematics*, vol. 6, 1958, p. 209.

14 E. Reissner, "On a Variational Theorem for Finite Elastic Deformations," *Journal of Mathematics and Physics*, vol. 32, 1953, p. 129.

APPENDIX 1

Analysis of Shells With Modified Boundary Conditions

As mentioned before, in both modified problems

$$\theta^* = 0 \tag{89}$$

$$\Phi^* = -2px \tag{90}$$

Substituting them into equations (55) and (56) one obtains

$$L_n^2\omega_n = L_n\psi_n - 2pL_n\omega_n \tag{91}$$

$$L_n^2\psi_n = -L_n\omega_n \tag{92}$$

The general solutions are expressed in terms of Bessel's functions

$$\omega_n = A_nJ_n(\mu x) + B_nJ_n\left(\frac{x}{\mu}\right) + C_nx^n + E_nY_n(\mu x) + F_nY_n\left(\frac{x}{\mu}\right) + G_nx^{-n} \tag{93}$$

$$\psi_n = \frac{A_n}{\mu^2}J_n(\mu x) + B_n\mu^2J_n\left(\frac{x}{\mu}\right) + D_nx^n + \frac{E_n}{\mu^2}Y_n(\mu x) + F_n\mu^2Y_n\left(\frac{x}{\mu}\right) + H_nx^{-n} \tag{94}$$

where

$$p = \frac{1}{2}\left(\mu^2 + \frac{1}{\mu^2}\right) \tag{95}$$

Downloaded From: http://appliedmechanics.asmedigitalcollection.asme.org/ on 01/28/2016 Terms of Use: http://www.asme.org/about-asme/terms-of-use

All components of stress resultant and moment are bounded at the center of the shell, therefore

$$\omega_n = A_n J_n(\mu x) + B_n J_n\left(\frac{x}{\mu}\right) + C_n x^n \tag{96}$$

$$\psi_n = \frac{A_n}{\mu^2} J_n(\mu x) + B_n \mu^2 J_n\left(\frac{x}{\mu}\right) + D_n x^n \tag{97}$$

The boundary conditions of the first modified problem are conveniently obtained from the principle of virtual work

$$\int_0^{2\pi}\int_0^a (M_r\delta\kappa_r + M_\theta\delta\kappa_\theta + M_{r\theta}\delta\kappa_{r\theta} + N_r\delta\epsilon_r + N_\theta\delta\epsilon_\theta + N_{r\theta}\delta\gamma_{r\theta} - q\delta W)r\,dr\,d\theta = 0 \tag{98}$$

Using the strain-displacement relations we get

$$-\int_0^{2\pi}\int_0^a \left\{\left[(rM_r)'' + \left(\frac{\ddot{M}_\theta}{r}\right) - M_\theta' + \frac{2}{r}\overline{(r\dot{M}_{r\theta})'} - (rN_r z')' - \left(\frac{\dot{\overline{N_\theta \dot{z}}}}{r}\right) - (N_{r\theta}\dot{z})' - \dot{\overline{(N_{r\theta}z')}} + qr\right]\delta W + [(rN_r)' + \dot{N}_{r\theta} - N_\theta]\delta U + [(rN_{r\theta})' + \dot{N}_\theta + N_{r\theta}]\delta V\right\} r\,dr\,d\theta$$

$$+ \int_0^{2\pi}\left\{[(rM_r)' + 2\dot{M}_{r\theta} - M_\theta]\delta\zeta + \left[\frac{2H}{a}((rM_r)' + 2\dot{M}_{r\theta} - M_\theta + 2HN_r) + aN_r\right]\delta\xi - aM_r\delta W' + aN_{r\theta}\delta V\right\}_{r=a} d\theta = 0 \tag{99}$$

where ζ and ξ are the displacements along the wall and perpendicular to the wall, respectively; therefore

$$\zeta = \frac{2H}{a}U - W \tag{100}$$

$$\xi = U + \frac{2H}{a}W \tag{101}$$

By substitution, we get the boundary conditions

$$(rM_r)' + 2\dot{M}_{r\theta} - M_\theta = 0 \tag{102}$$

$$W' = 0 \tag{103}$$

$$\xi = 0 \tag{104}$$

$$N_{r\theta} = 0 \tag{105}$$

In terms of the nondimensional quantities, these are

$$\omega_n' = 0 \tag{106}$$

$$\lambda(L_n\omega_n)' + (1-\nu)\frac{n^2}{\lambda^2}\omega_n = 0 \tag{107}$$

$$\lambda\psi_n' - \psi_n = 0 \tag{108}$$

$$L_n\psi_n - \lambda(L_n\psi_n)' + (1+\nu)(n^2-1)\psi_n + \omega_n = 0 \tag{109}$$

Substituting equations (96) and (97) into equations (106)–(109) and eliminating the coefficient of D_n, we have the following characteristic equation from the resulting equations:

$$\begin{vmatrix} \mu\lambda J_n'(\mu\lambda) & \frac{\lambda}{\mu}J_n'\left(\frac{\lambda}{\mu}\right) & n \\ -\mu^3\lambda^3 J_n'(\mu\lambda) + (1-\nu)n^2 J_n(\mu\lambda) & -\frac{\lambda^3}{\mu^3}J_n'\left(\frac{\lambda}{\mu}\right) + (1-\nu)n^2 J_n\left(\frac{\lambda}{\mu}\right) & (1-\nu)n^2 \\ \frac{1}{\mu\lambda}J_n'(\mu\lambda) - \frac{n}{\mu^2\lambda^2}J_n(\mu\lambda) & \frac{\mu}{\lambda}J_n'\left(\frac{\lambda}{\mu}\right) - n\frac{\mu^2}{\lambda^2}J_n\left(\frac{\lambda}{\mu}\right) & \frac{n-1}{n+1}\frac{1}{(1+\nu)\lambda^2} \end{vmatrix} = 0 \tag{110}$$

The case $n = 1$ is also a special case in the modified problems However, equation (110) still holds for $n = 1$.

The buckling pressures are plotted against λ for different values of n in Fig. 5. The case $n = 0$ represents an axisymmetrical buckling.

The boundary conditions of the second modified problem are the same as those of the main problem. Substituting equations (96) and (97) into equations (57)–(60) and eliminating the coefficient of D_n, we get the following characteristic equation:

$$\begin{vmatrix} J_n(\mu\lambda) & J_n\left(\frac{\lambda}{\mu}\right) & 1 \\ \mu\lambda J_n'(\mu\lambda) & \frac{\lambda}{\mu}J_n'\left(\frac{\lambda}{\mu}\right) & n \\ \frac{n}{\mu\lambda}J_n'(\mu\lambda) - \frac{n(1+n)}{2\mu^2\lambda^2}J_n(\mu\lambda) & \frac{n\mu}{\lambda}J_n'\left(\frac{\lambda}{\mu}\right) - \frac{n(1+n)\mu^2}{2\lambda^2}J_n\left(\frac{\lambda}{\mu}\right) & -\frac{1}{1+\nu} \end{vmatrix} = 0 \tag{111}$$

This equation holds for the special case $n = 1$ but is not applicable for $n = 0$ where we can show by using equations (55) and (56) that equations (57)–(60) are linearly dependent. Omitting the last boundary condition equation (60), we can get the characteristic equation for $n = 0$, which is

$$\mu\lambda J_0\left(\frac{\lambda}{\mu}\right)J_0'(\mu\lambda) - \frac{\lambda}{\mu}J_0(\mu\lambda)J_0'\left(\frac{\lambda}{\mu}\right) + (1+\nu)\left(\mu^2 - \frac{1}{\mu^2}\right)J_0'(\mu\lambda)J_0'\left(\frac{\lambda}{\mu}\right) = 0 \tag{112}$$

The $p_{cr} - \lambda$ curves for the second modified problem are shown in Fig. 6.

APPENDIX 2

Variational Principle for Buckling of Clamped Shallow Spherical Shells

A variational principle for the problem of clamped shallow spherical shells was first considered by Weinitschke [13] for the problem of axisymmetrical deformation of shells. From a modified Reissner variational principle [14], we can show that equations (45), (46), (49), and (50) are equivalent to the following variational principle:

$$\delta\int_0^\lambda \left\{\frac{1}{x}\psi^{*\prime}[x\omega^* + \tfrac{1}{2}(\omega^{*\prime})^2] + \tfrac{1}{2}(\nabla^2\omega^*)^2 - \tfrac{1}{2}(\nabla^2\psi^*)^2 - 4p\omega^*\right\} x\,dx + \tfrac{1}{2}(1+\nu)\delta[\psi^{*\prime}(\lambda)]^2 = 0 \tag{113}$$

Downloaded From: http://appliedmechanics.asmedigitalcollection.asme.org/ on 01/28/2016 Terms of Use: http://www.asme.org/about-asme/terms-of-use

where $\omega^*(\lambda) = \omega^{*\prime}(\lambda) = 0$ is specified. Furthermore, equations (55)–(60) are equivalent to the following variational principle:

$$\delta \int_0^\lambda \left\{ \frac{1}{2x} \psi^{*\prime}(\omega_n')^2 + \tfrac{1}{2}\psi^{*\prime\prime} \frac{n^2}{x^2} (\omega_n)^2 + \left(\frac{1}{x} \psi_n' - \frac{n^2}{x^2} \psi_n \right) (x\omega_n' + \omega^{*\prime}\omega_n') - n^2 \left(\frac{1}{x} \psi_n \right)' \left(\omega_n + \frac{\omega_n \omega^{*\prime}}{x} \right)' + \tfrac{1}{2}(L_n\omega_n)^2 - \tfrac{1}{2}(L_n\psi_n)^2 \right\} x\, dx + \tfrac{1}{2}(1+\nu)\delta \left[(\psi_n')^2 - n^2 \left(\frac{\psi_n^2}{x} \right)' \right]_{x=\lambda} = 0 \quad (114)$$

where $\omega_n(\lambda) = \omega_n'(\lambda) = 0$ is specified and variations are taken with respect to ω_n and ψ_n.

To apply these variational principles we try

$$\omega^* = (x^2 - \lambda^2)(Ax^2 + B\lambda^2)/\lambda^4 \quad (115)$$

$$\psi^* = Cx^4 + D\lambda^2 x^2 \quad (116)$$

$$\omega_n = Ex^n(x^2 - \lambda^2)^2 \quad (117)$$

$$\psi_n = x^n(Fx^4 + G\lambda^2 x^2 + H\lambda^4) \quad (118)$$

Substituting these expressions into equation (113) and taking variations with respect to A, B, C, and D, we obtain four nonlinear equations for the unknowns A, B, C, and D; their values can be calculated numerically for any assigned p. Substituting equations (115)–(118) into equation (114) and taking variations with respect to E, F, G, and H, we obtain four homogeneous linear equations and, hence, the characteristic equation from which the buckling pressure can be determined for any n. The numerical calculation has been done for $\lambda = 6$ and the buckling pressures are shown in Table 1.

APPENDIX 3

Asymptotic Solution for Buckling Pressure for Shallow Spherical Shells with Large λ

It is interesting to consider the asymptotic behavior of clamped shallow spherical shells when λ approaches infinity. A boundary layer is found near the edge of the shell when the shell deforms axisymmetrically before buckling. In the region outside the boundary layer, the shell deforms essentially by a rigid-body downward displacement, hence all components of stress resultant and moment, except N_r, vanish.

Let

$$\bar{\Phi} = \Phi^* + 2px \quad (119)$$

Equations (47)–(50) can be written as

$$\theta^{*\prime\prime} + \frac{\theta^{*\prime}}{x} - \frac{\theta^*}{x^2} + \bar{\Phi} = -2p\theta^* + \frac{\bar{\Phi}\theta^*}{x} \quad (120)$$

$$\bar{\Phi}'' + \frac{\bar{\Phi}'}{x} - \frac{\bar{\Phi}}{x^2} - \theta^* = -\frac{1}{2x}\theta^{*2} \quad (121)$$

$$\theta^*(\lambda) = 0 \quad (122)$$

$$\bar{\Phi}'(\lambda) - \frac{\nu}{\lambda}\bar{\Phi}(\lambda) = 2(1-\nu)p \quad (123)$$

In the region of boundary layer where x approaches infinity, the following equations can be used:

$$\theta^{*\prime\prime} + \bar{\Phi} = -2p\theta^* \quad (124)$$

$$\bar{\Phi}'' - \theta^* = 0 \quad (125)$$

$$\theta^*(\lambda) = 0 \quad (126)$$

$$\bar{\Phi}'(\lambda) = 2(1-\nu)p \quad (127)$$

When $p < 1$, this problem can be solved analytically. The final results are

$$\theta^* = \frac{2(2p)^{1/2}(1-\nu)}{(1+p)^{1/2}} e^{-\left(\frac{1-p}{2}\right)^{1/2}(\lambda - x)} \sin\left(\frac{1+p}{2}\right)^{1/2}(\lambda - x) \quad (128)$$

$$\bar{\Phi} = \frac{2(2p)^{1/2}(1-\nu)}{(1+p)^{1/2}} e^{-\left(\frac{1-p}{2}\right)^{1/2}(\lambda - x)} \left[(1-p^2)^{1/2} \cos\left(\frac{1+p}{2}\right)^{1/2}(\lambda - x) - p \sin\left(\frac{1+p}{2}\right)^{1/2}(\lambda - x) \right]$$

or

$$\Phi^* \approx -2px \quad (129)$$

From Fig. 8 it can be seen that a boundary layer also appears in the buckling mode of unsymmetrical buckling. Let δ_b be an effective boundary-layer thickness and

$$\bar{x} = x + \delta_b - \lambda \quad (130)$$

$$(\ )' = \frac{d}{d\bar{x}}(\ )$$

then, in the region of boundary layer, equations (55)–(60) become

$$\omega^{iv} - 2\sigma\omega'' + \sigma^2\omega - \psi'' + \sigma(1 - \theta^{*\prime})\psi + 2p\omega'' - 2p\sigma\omega = 0 \quad (131)$$

$$\psi^{iv} - 2\sigma\psi'' + \sigma^2\psi + \omega'' - \sigma(1 - \theta^{*\prime})\omega = 0 \quad (132)$$

$$\omega(\delta_b) = 0 \quad (133)$$

$$\omega'(\delta_b) = 0 \quad (134)$$

$$\psi''(\delta_b) + \nu\sigma\psi(\delta_b) = 0 \quad (135)$$

$$\psi'''(\delta_b) - (2+\nu)\sigma\psi'(\delta_b) = 0 \quad (136)$$

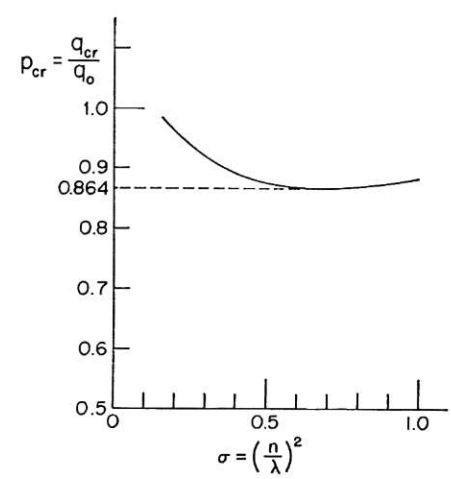

Fig. 10 p_{cr}–σ curve for determination of p_{cr} when λ approaches infinity

Fig. 11 Buckling mode of clamped shallow spherical shells when λ approaches infinity

Downloaded From: http://appliedmechanics.asmedigitalcollection.asme.org/ on 01/28/2016 Terms of Use: http://www.asme.org/about-asme/terms-of-use

where

$$\sigma = \lim_{\lambda \to \infty} \left(\frac{n}{\lambda}\right)^2 \tag{137}$$

and

$$\theta^{*\prime} = 2p(1 - \nu)e^{-\left(\frac{1-p}{2}\right)^{1/2}(\delta - \bar{x})} \left[\left(\frac{1 - p}{1 + p}\right)^{1/2} \sin\left(\frac{1 + p}{2}\right)^{1/2}(\delta - \bar{x}) - \cos\left(\frac{1 + p}{2}\right)^{1/2}(\delta - \bar{x})\right] \tag{138}$$

Also

$$\omega(0) = \omega''(0) = \psi(0) = \psi''(0) = 0 \tag{139}$$

By the same method as given in the main problem, the asymptotic value of the critical pressures can be evaluated numerically. In the calculation, δ_b was chosen equal to 40. The critical pressures p_{cr} are plotted against σ in Fig. 10. The minimum of this curve determines the required asymptotic value of the critical pressure for λ equal to infinity which is found to be $p_{cr} = 0.864$ when the ratio n/λ approaches 0.817. The buckling mode is also calculated and is shown in Fig. 11 from which the actual boundary-layer thickness is found to be 12 approximately.

Downloaded From: http://appliedmechanics.asmedigitalcollection.asme.org/ on 01/28/2016 Terms of Use: http://www.asme.org/about-asme/terms-of-use